Be
ahead

DEIMOS AC A800

POLEDOOR

YETKİLİ BFT TÜRKİYE SATIŞ VE SERVİSİ

WWW.POLEDOOR.COM

BFT

Be ahead

Yana Kayar Kapı Otomasyonu

POLEDOOR

BFT
Be ahead

Giriş

- Yeni tasarım dili
- Kolay kurulum ve kullanım
- 230 V Motor
- 800 Kg’a kadar

Ürün Gelişimi

DEIMOS

DEIMOS AC A

www.bft-automation.com

POLEDOOR
YETKİLİ BFT TÜRKİYE SATIŞ VE SERVİSİ
WWW.POLEDOOR.COM

BFT
Be ahead

Avatajlar & Yenilikler

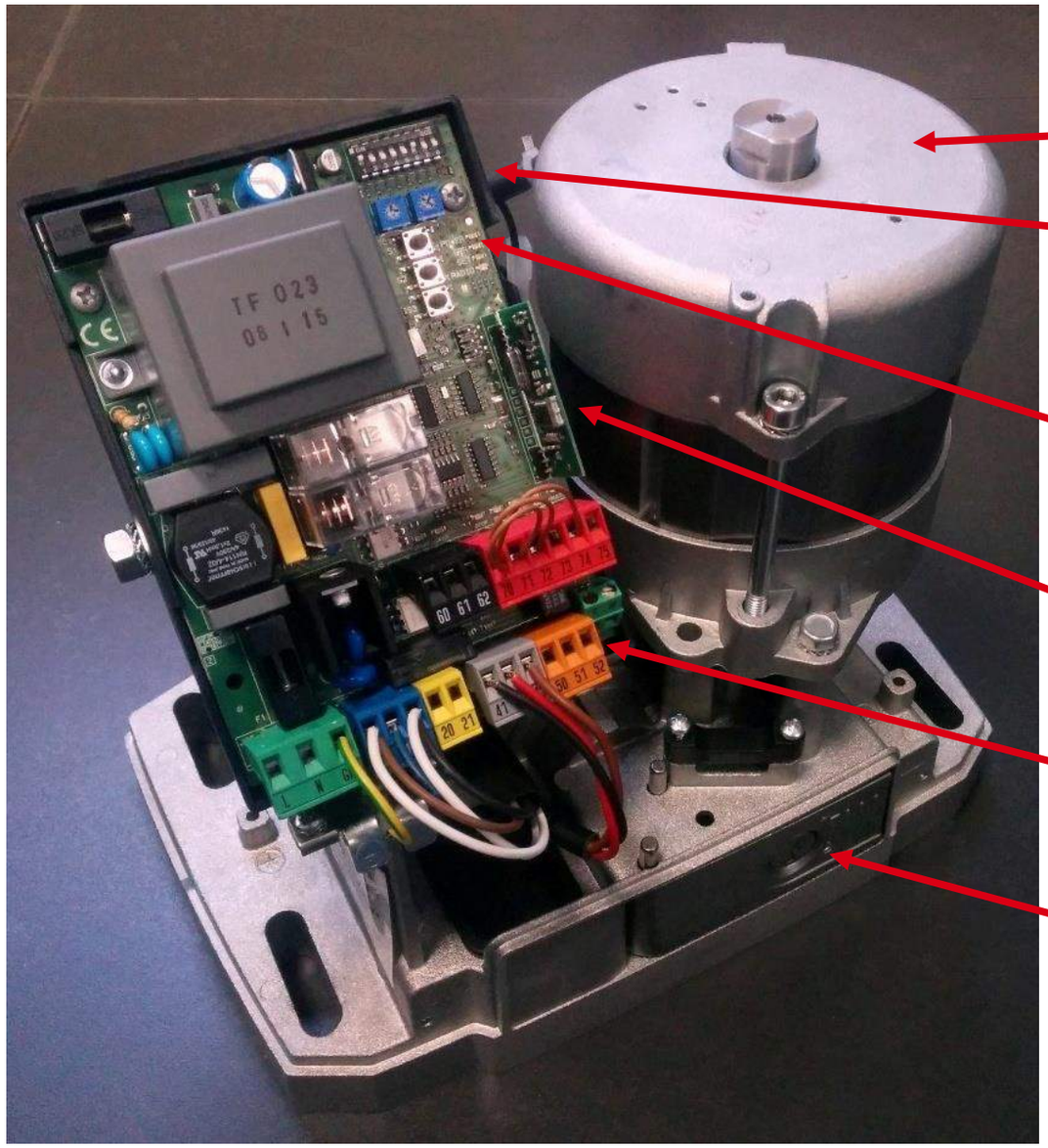

Motor 230V

Kontrol kartı motorun yanında eğimli

Potansiyometre ve DIP Sviçler ile kolay programlama

Entegre , çift kanallı alıcı kartı

Standart ve renkli terminaller

Kişiye özel anahtar ile serbest bırakma

Deimos serilerinde kullanılan aynı sabitleme plakası

Avatajlar & Yenilikler

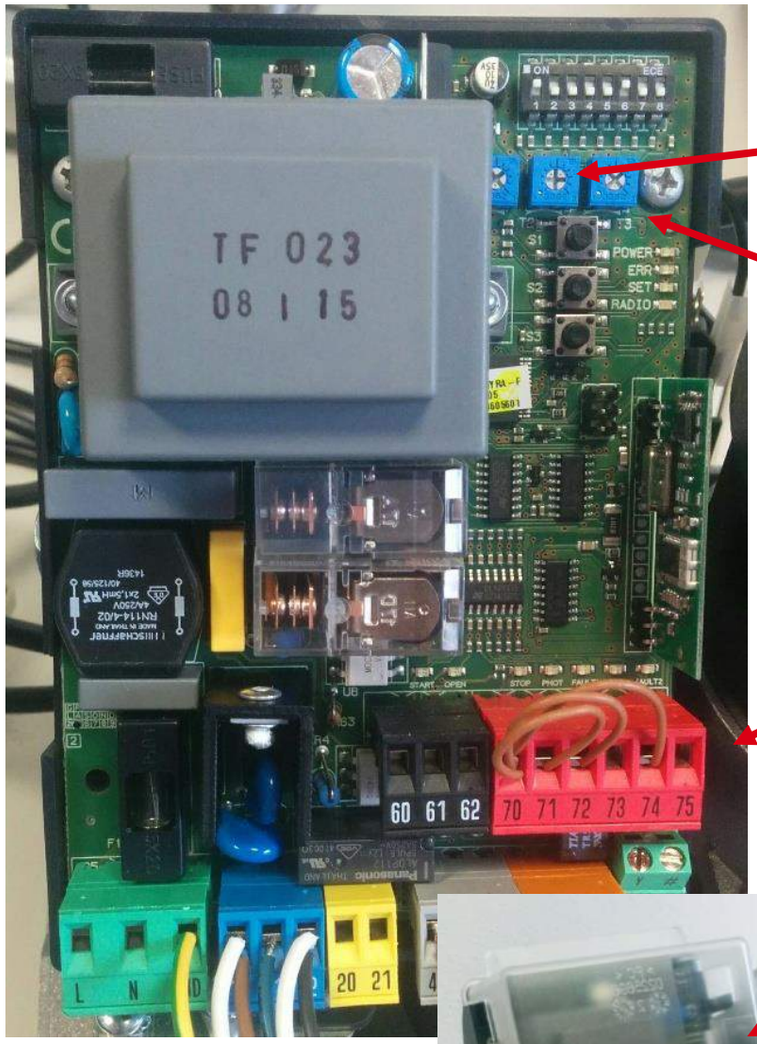

Tork ayarı , kart üzerinde bir trimpot ile

Yavaşlama zamanı ayarı

Pnömatiği sadece kapanmada etkinleştirme özelliği

Emniyet cihazlarını test etme özelliği

Vidasız , transparan kontrol kartı kapağı

POLEDOOR
YETKİLİ BFT TÜRKİYE SATIŞ VE SERVİSİ
WWW.POLEDOOR.COM
BFT
Be ahead

Ürün Seçimi

- Kapı ağırlığı (800kg'ye kadar)
- Kullanım (Konut tipi , yoğun)
- Ters çevrilemez
- 230V motor

POLEDOOR
YETKİLİ BFT TÜRKİYE SATIŞ VE SERVİSİ
WWW.POLEDOOR.COM

BFT
Be ahead

Teknik Özellikler

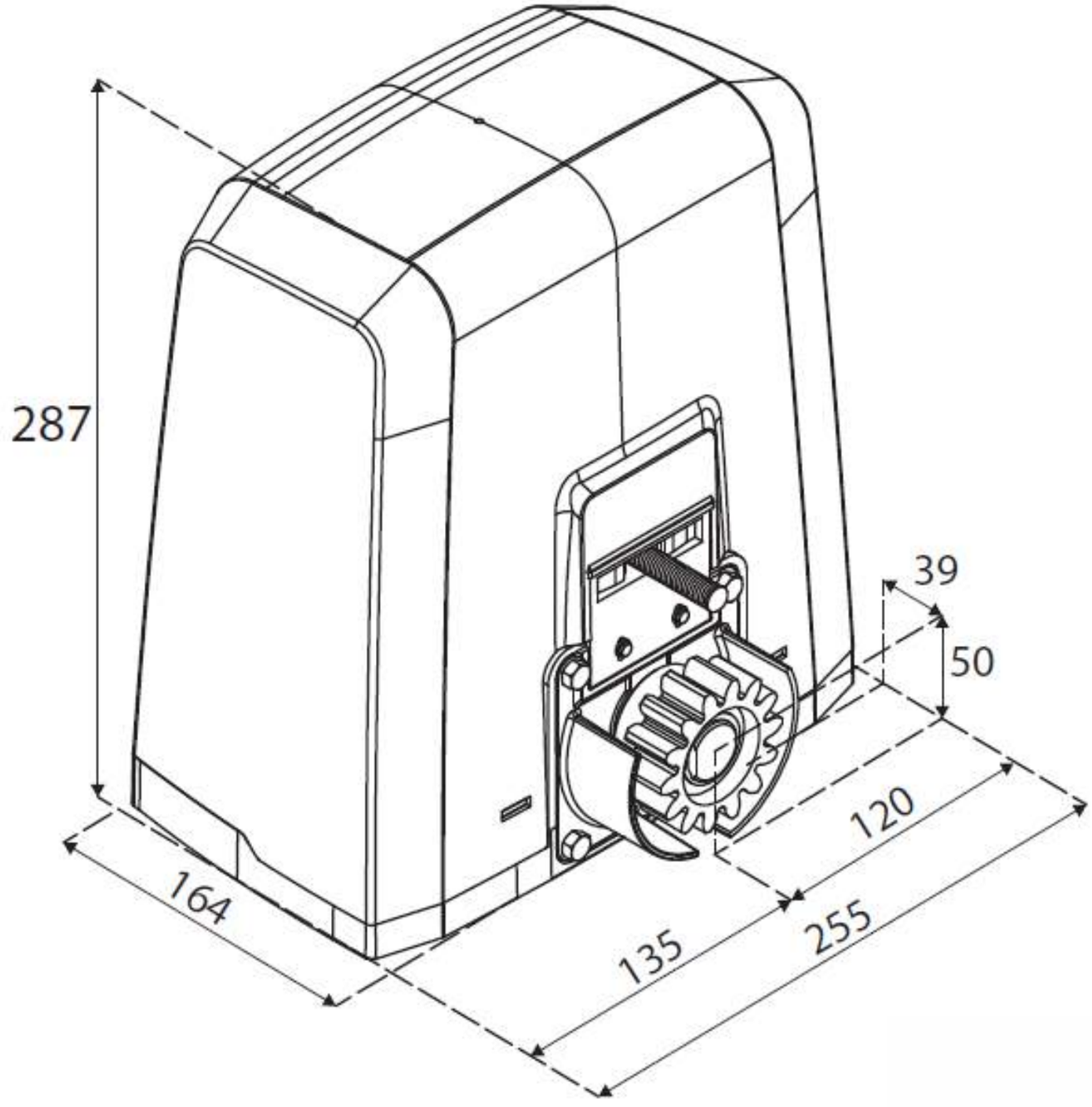

POLEDOOR
YETKİLİ BFT TÜRKİYE SATIŞ VE SERVİSİ
WWW.POLEDOOR.COM
BFT
Be ahead

Teknik Özellikler

Kontrol kartı – SHYRA

Aksesuarlar Güç Kaynağı	**24V AC 200mA**
Radyo Frekansı	**433,92MHz**
Maksimum Kumanda	**63**
Kombinasyon	**4 billions**
Güç	**500W**

Teknik Özellikler

	DEIMOS AC A800
Maksimum kanat ağırlığı	**800kg**
Güç Kaynağı	**230V**
Emilen Güç	**330W**
Motorgüç kaynağı	**230V AC**
Tork	**20Nm**
Pinyon dişli	**modulo 4**
Kapı hızı	**9m/min (Z14) - max 800kg** **11m/min (Z18) - max 500kg**
Darbe reaksiyonu	**Elektronik tork ayarı**
Koruma sınıfı	**IP24**
Maksimum çevrim	**S3 33s -1-33s-1x20 pausae 36 min.**

Kurulum

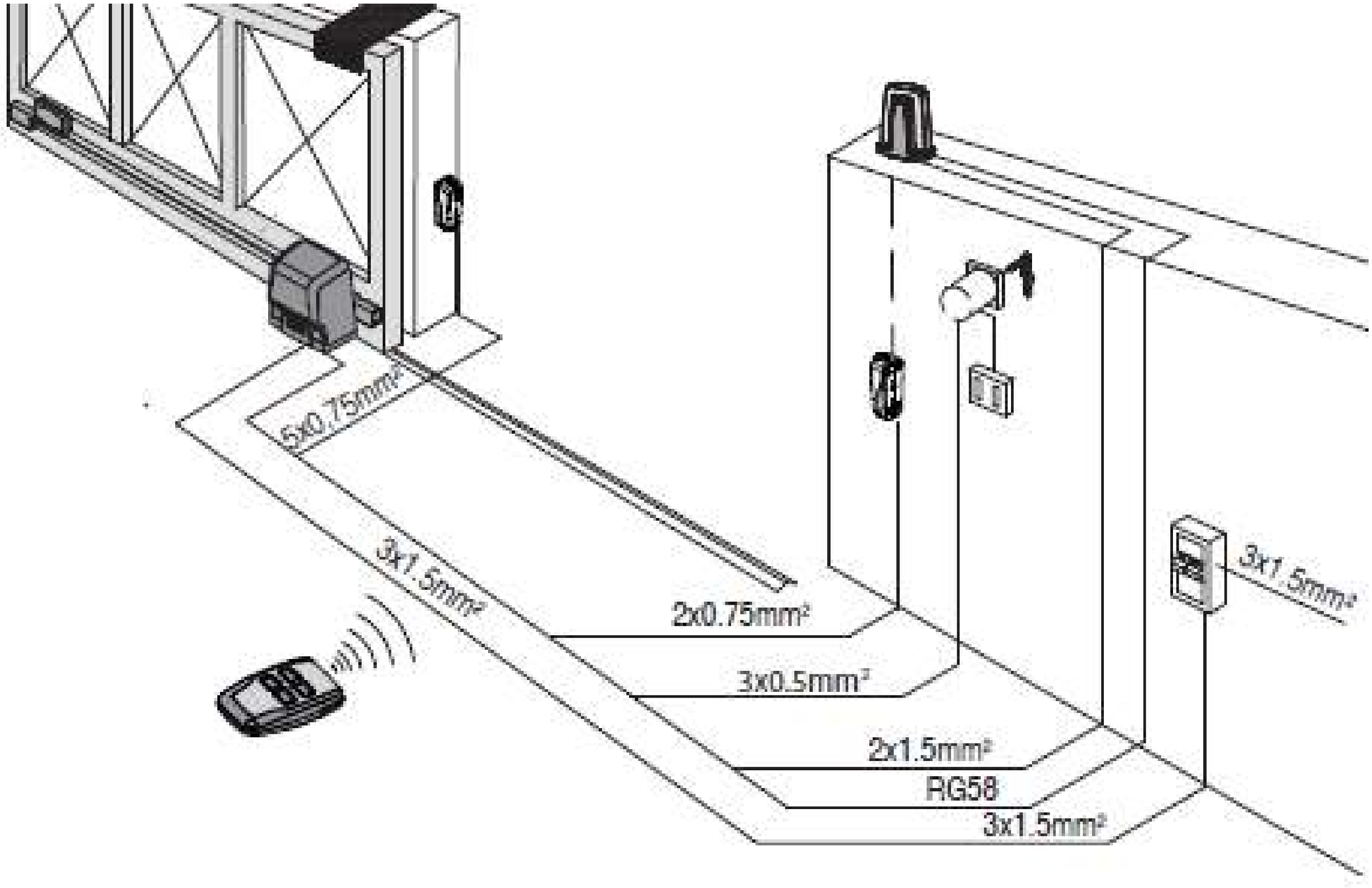
5x0.75mm²
3x1.5mm²
2x0.75mm²
3x0.5mm²
2x1.5mm²
RG58
3x1.5mm²
3x1.5mm²

Kurulum

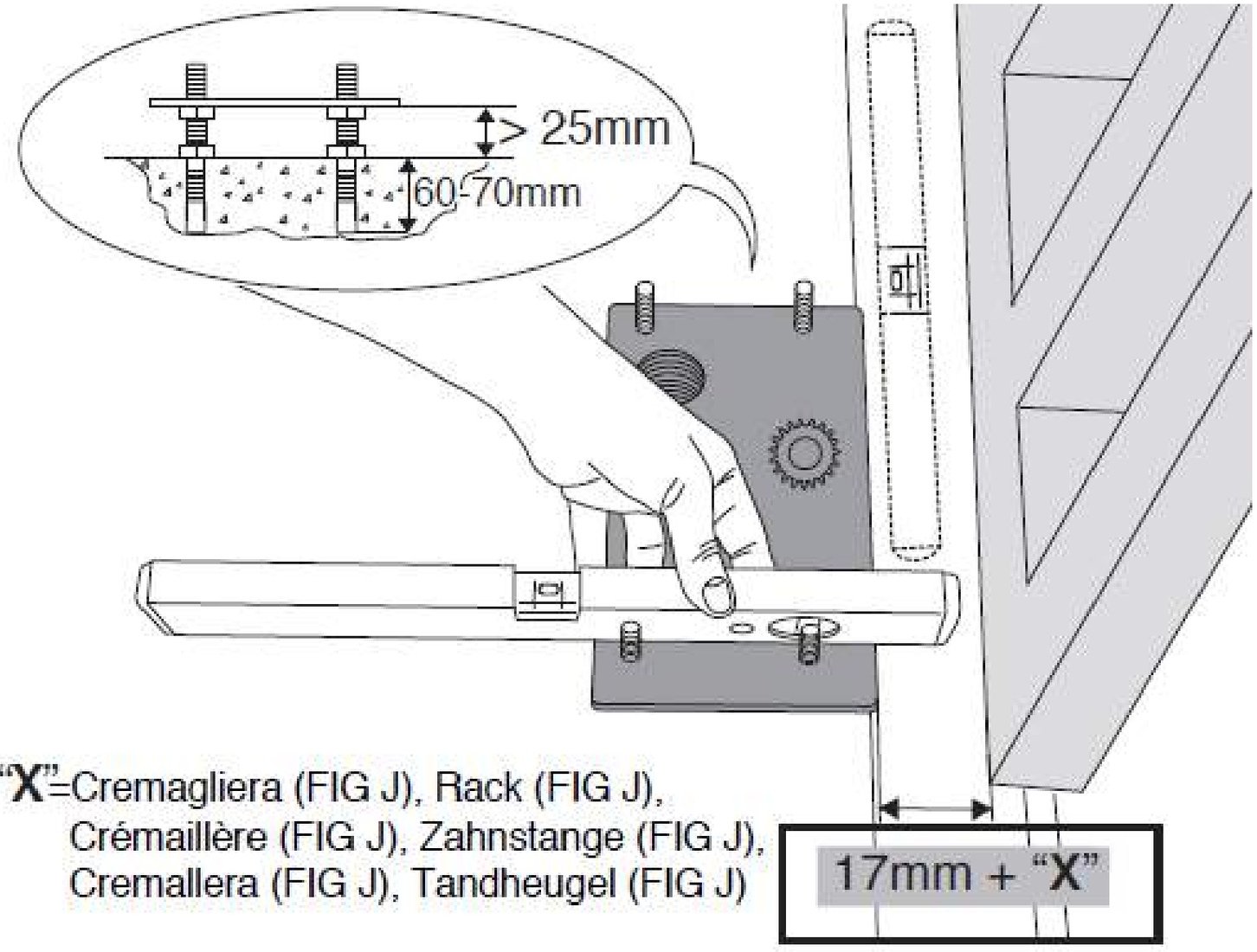

X : Kremayer (FIG J)

POLEDOOR
YETKİLİ BFT TÜRKİYE SATIŞ VE SERVİSİ
WWW.POLEDOOR.COM
BFT
Be ahead

Kurulum

POLEDOOR

YETKİLİ BFT TÜRKİYE SATIŞ VE SERVİSİ

WWW.POLEDOOR.COM

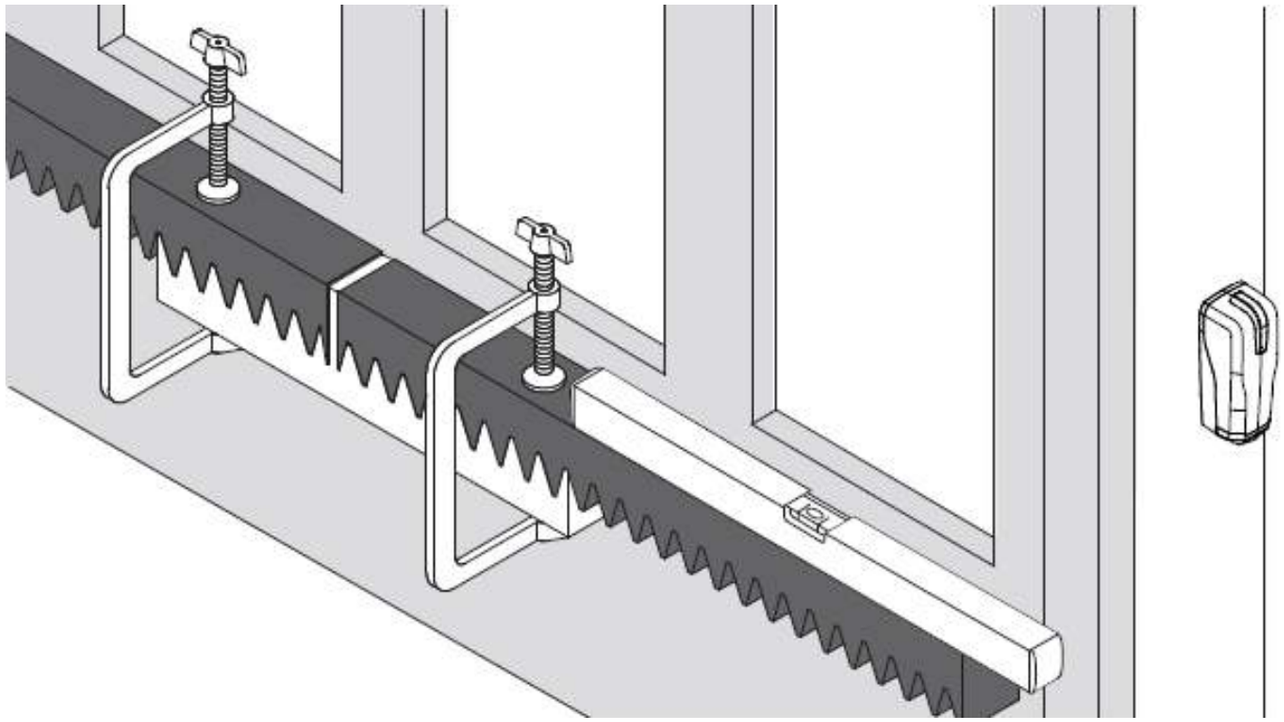

Kurulum

Limit sviç dirsekleri

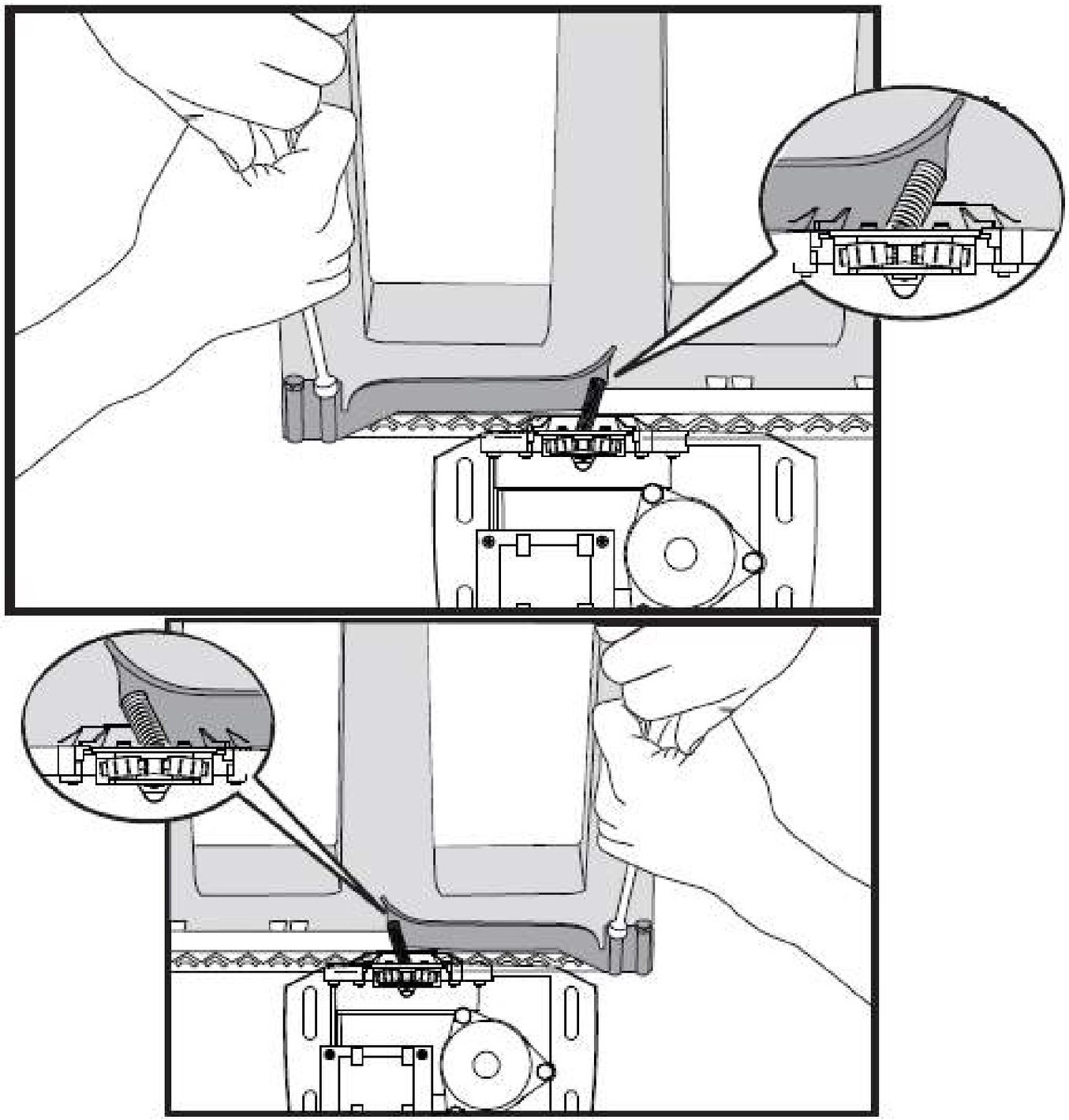

Kurulum

Açılma Yönü Seçimi

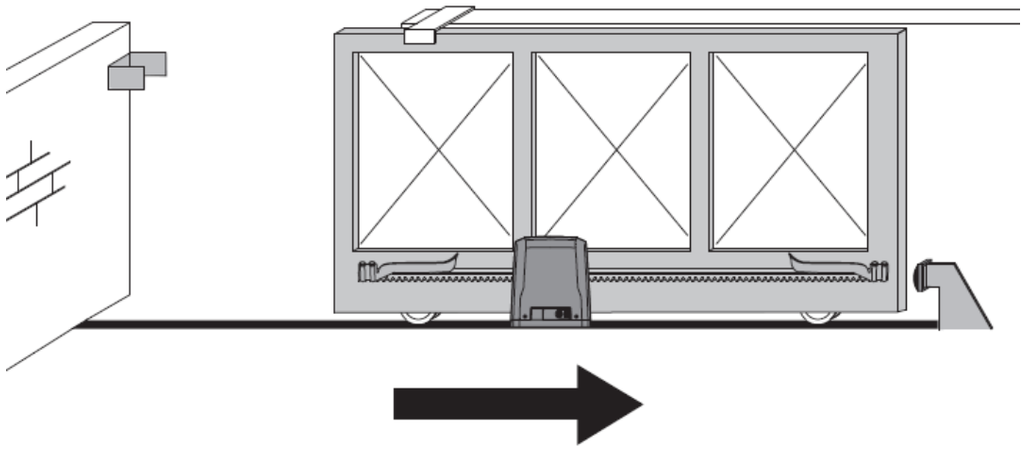

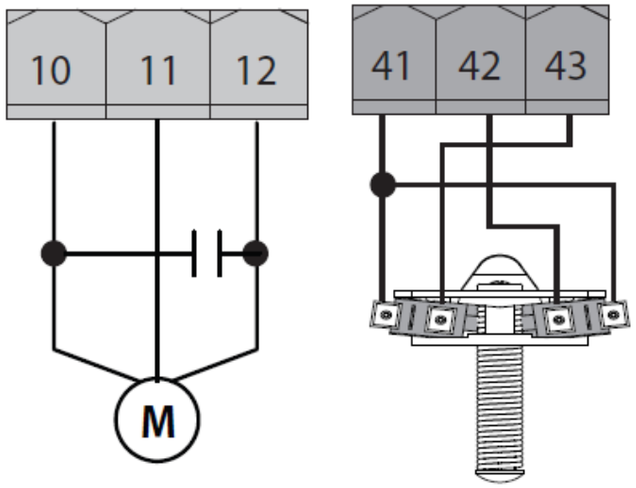

Açılma yönü: SAĞ

Varsayılan ayar

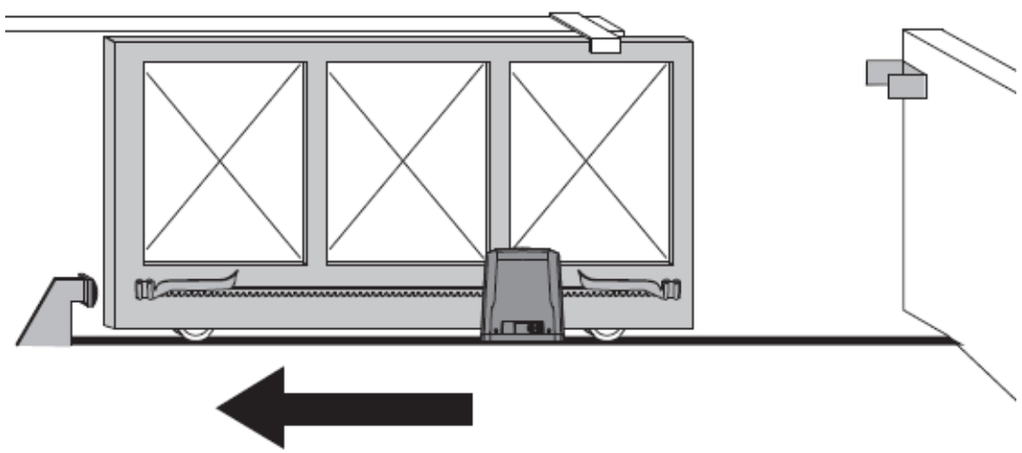

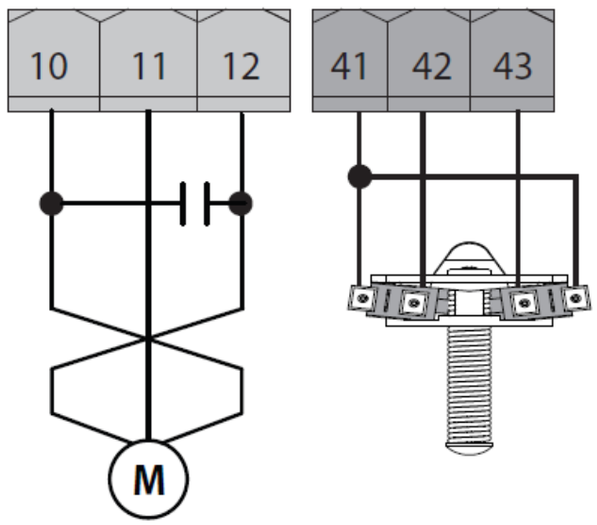

Açılma yönü: SOL

Be ahead

Kurulum

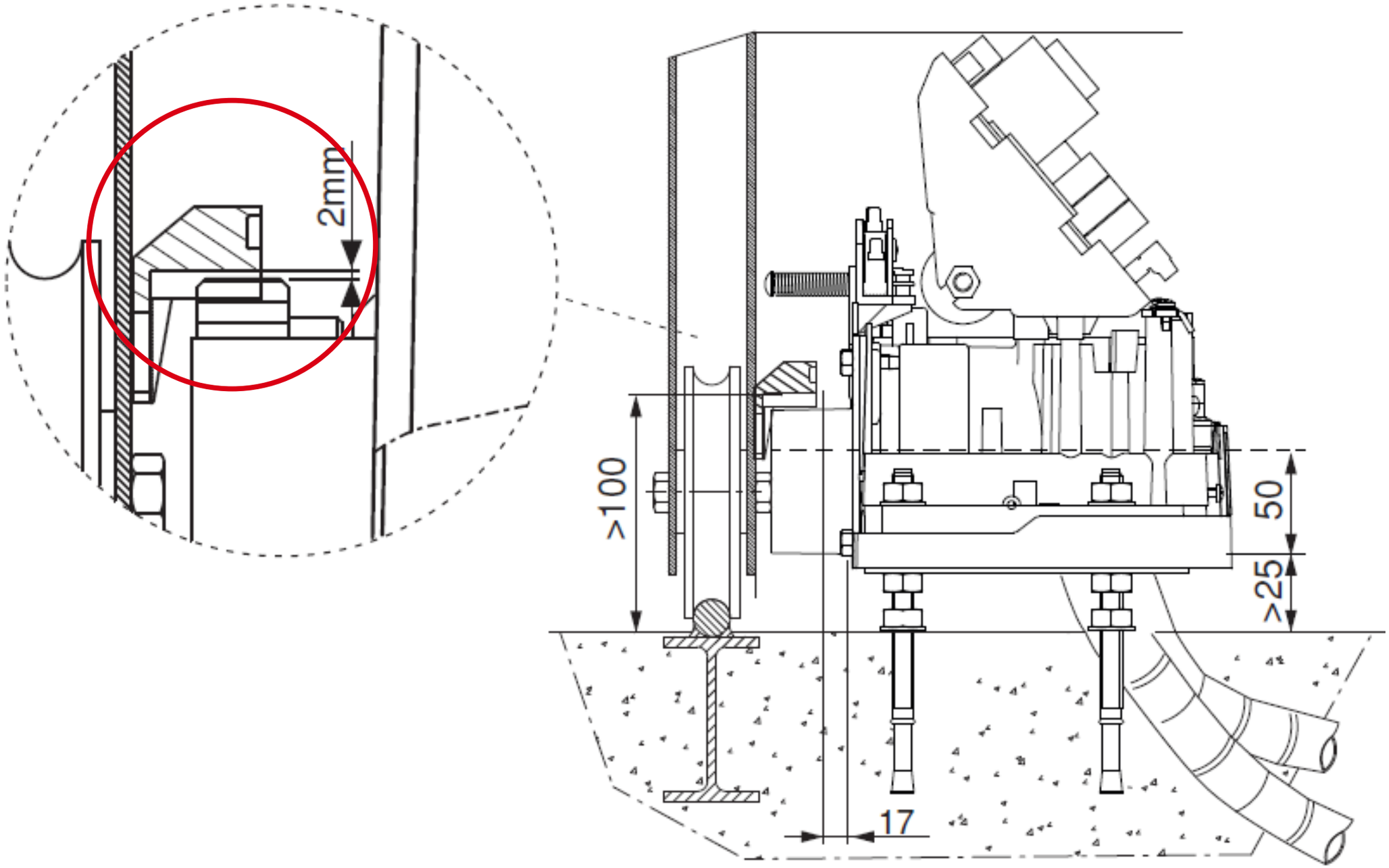

Kurulum

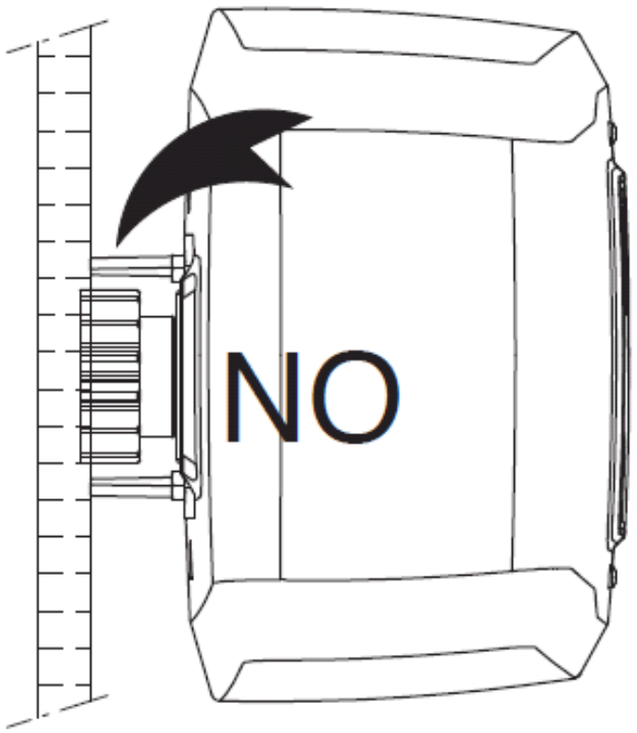

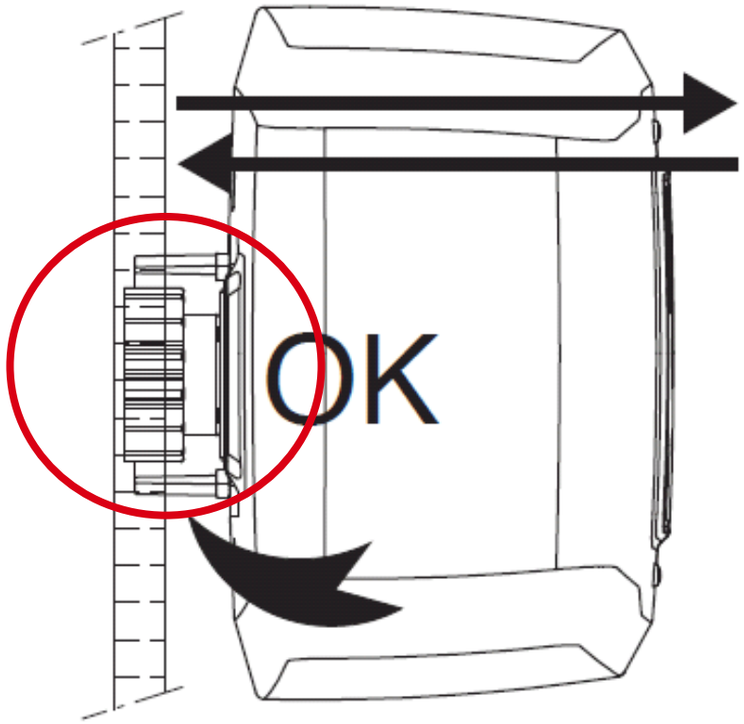

Kurulum

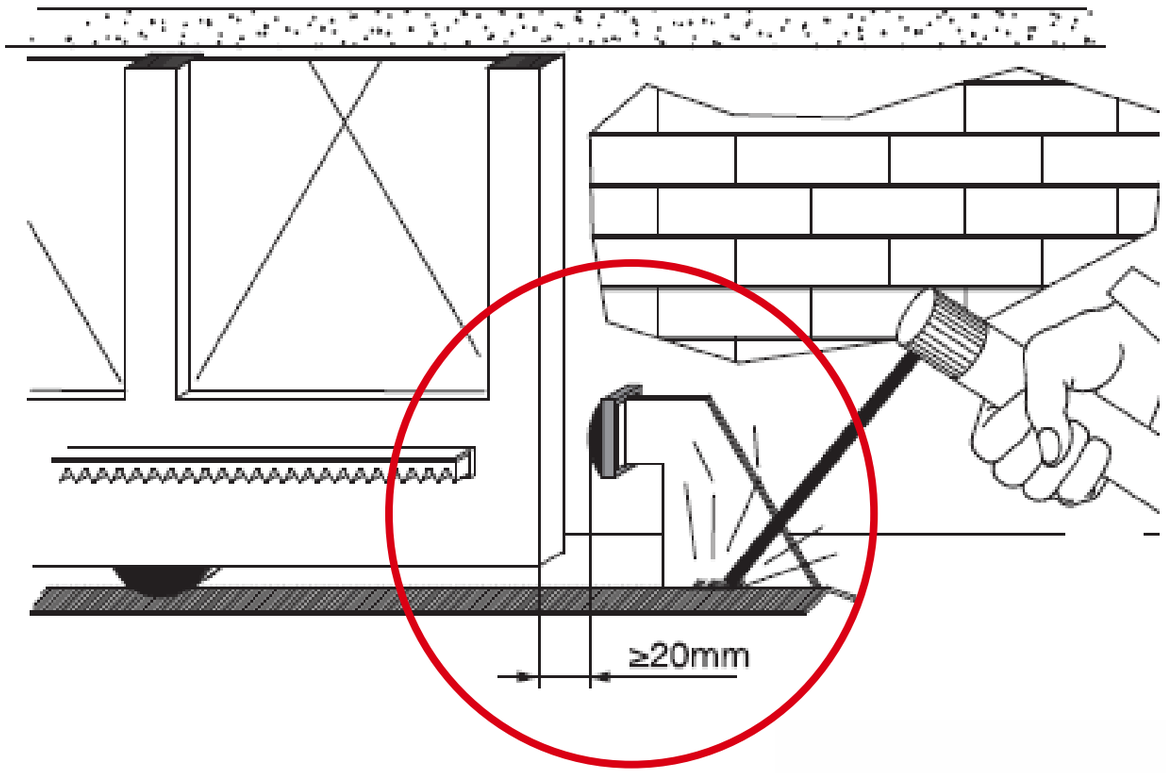

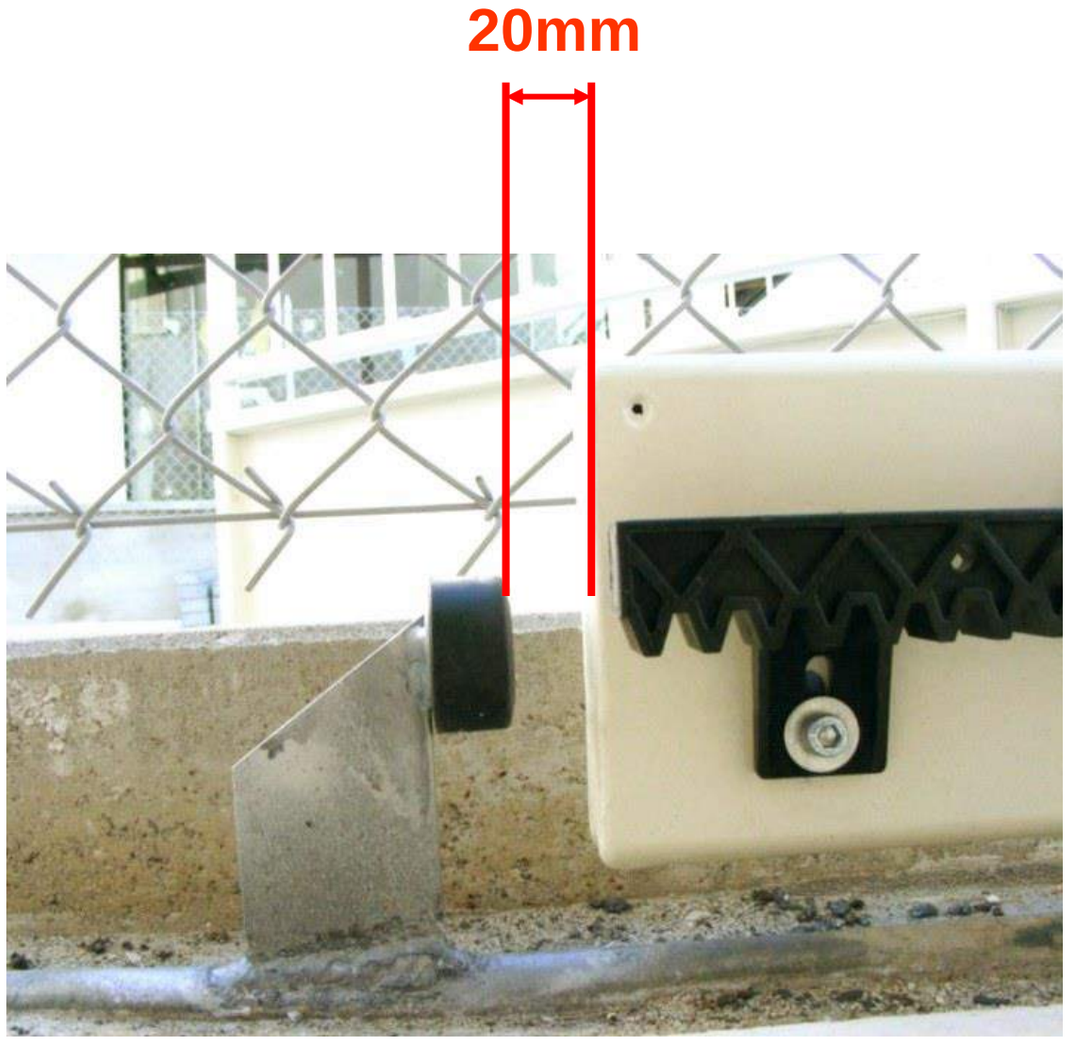

Programlama

SHYRA

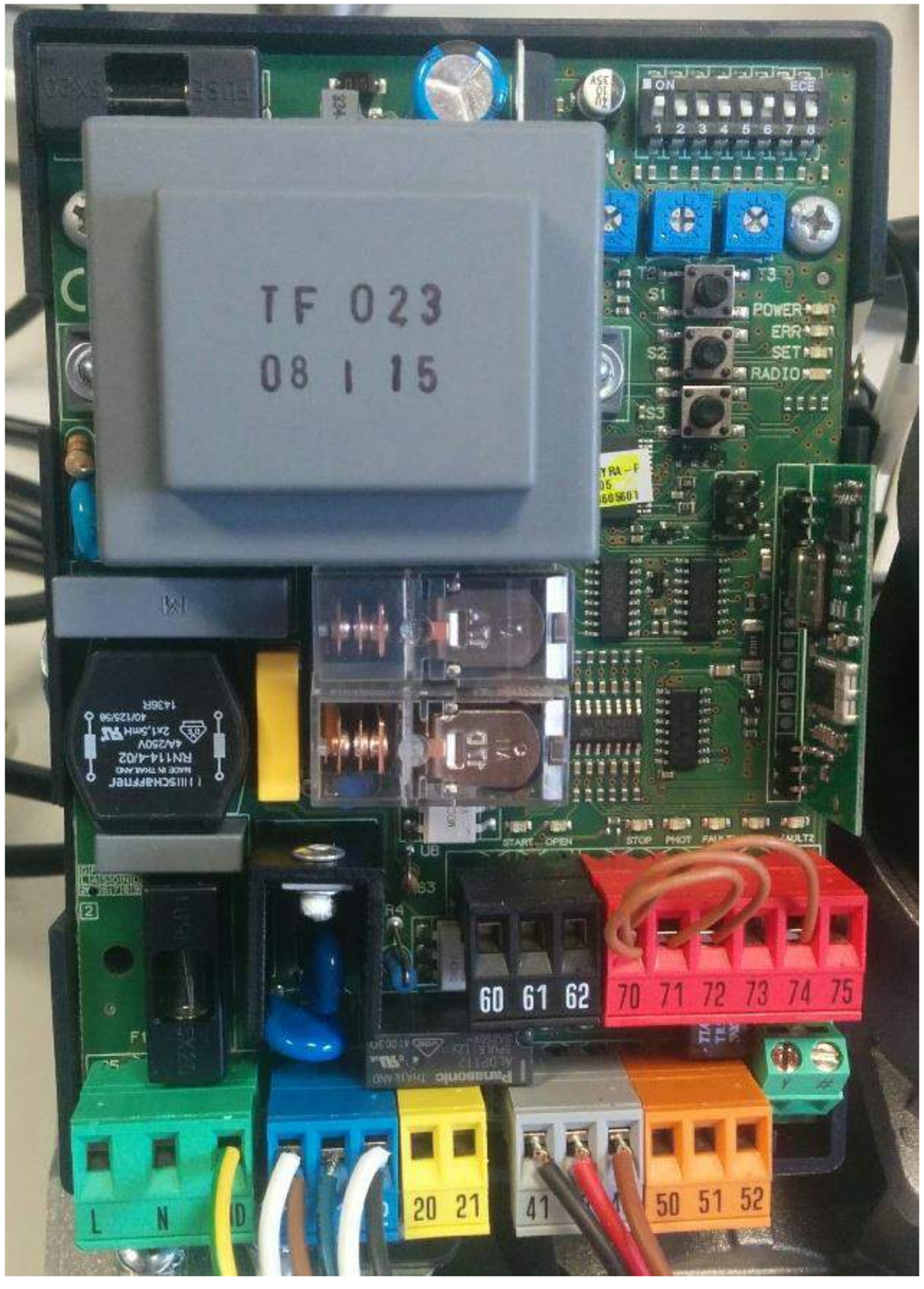

BFT
Be ahead

Programlama

SHYRA

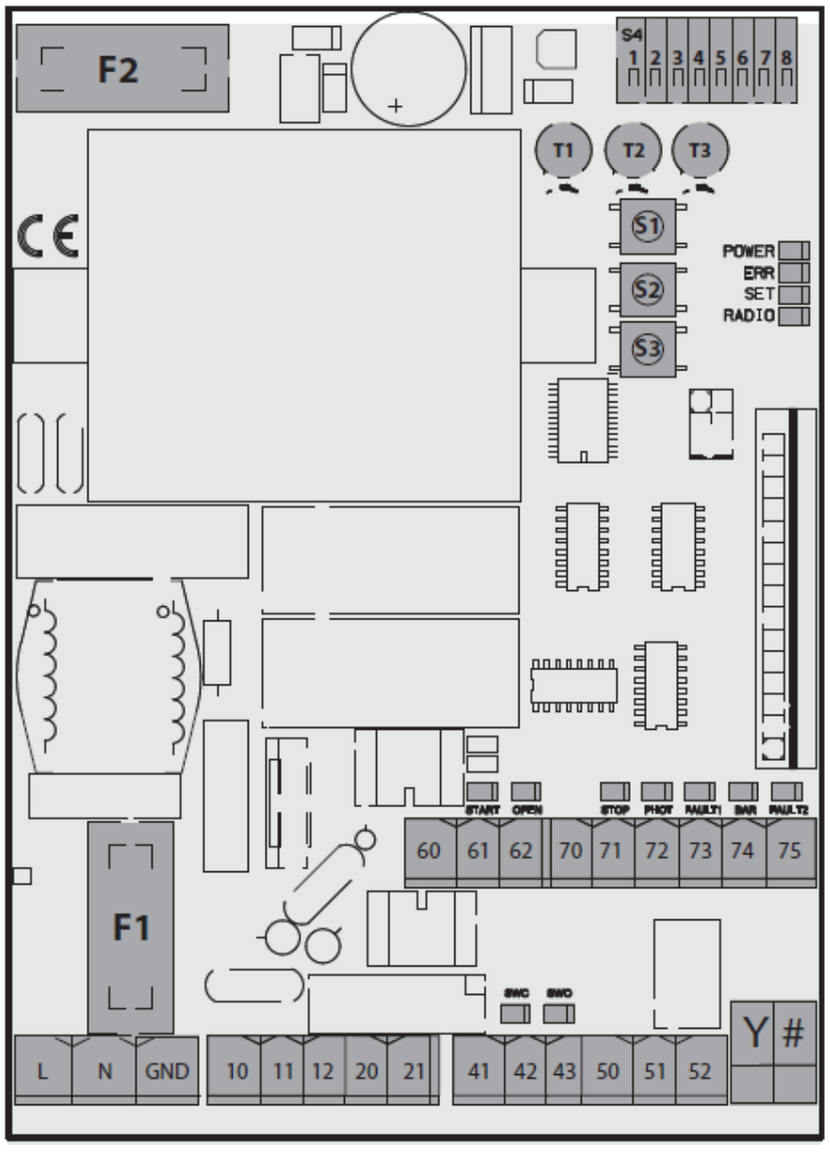

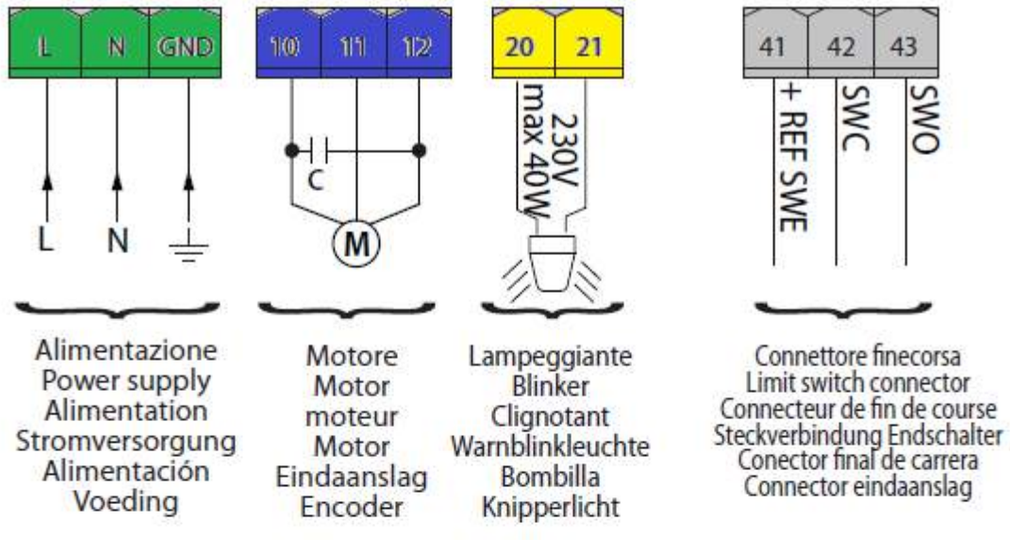

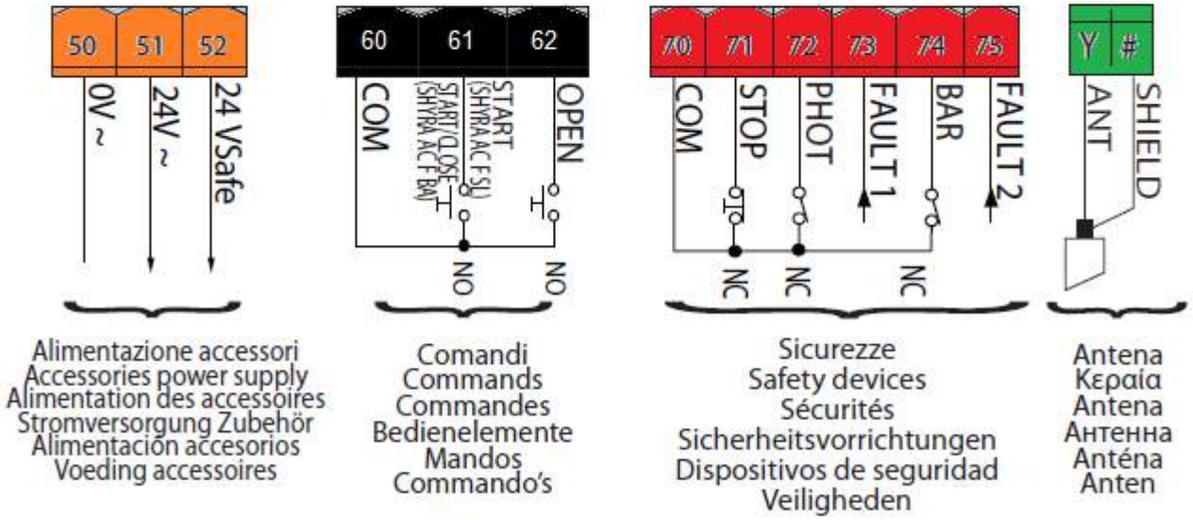

POLEDOOR
YETKİLİ BFT TÜRKİYE SATIŞ VE SERVİSİ
WWW.POLEDOOR.COM
BFT
Be ahead

Programlama

POLEDOOR
YETKİLİ BFT TÜRKİYE SATIŞ VE SERVİSİ
WWW.POLEDOOR.COM

KEYS	Description
S1	**Add Start Key** associates the desired key with the Start command.
S2	**Add Pedestrian Key (SHYRA AC F SL)** associates the desired key with the pedestrian command.
	Add Open key (SHYRA AC F BA) associates the desired key with the open command.
S2 >5s	Confirms the changes made to parameter settings and operating
S1+S2 >10s	**Erase List** **WARNING!** Erases all memorized transmitters from the receiver's memory.
S3	Pressed BRIEFLY, it gives the START command.
	HELD DOWN (>5 sec.), it activates the AUTOSET function.
	Pressing and holding (>10s) takes the work time back to the default value

Kumanda tanıtma

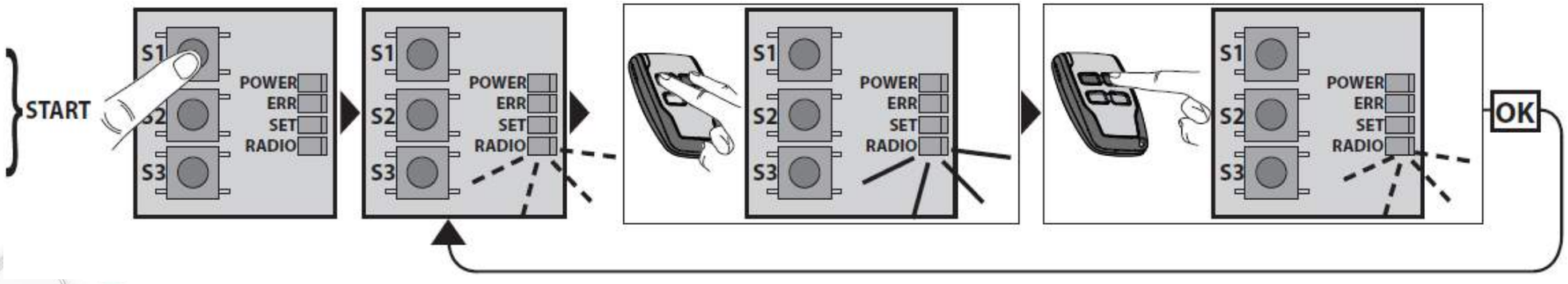

Programlama

Trimpot ayarı

POLEDOOR
YETKİLİ BFT TÜRKİYE SATIŞ VE SERVİSİ
WWW.POLEDOOR.COM

TRIMMER	Parameter	min.	max.	default	Description
T1	Automatic closing time [s]	0	120	0	Waiting time before automatic closing. **NOTE: Set to 0 if not used.**
T2	**SHYRA AC F SL**				
	Leaf strength [%]	1	100	50%	Force exerted by leaf/leaves.This is the percentage of force delivered, beyond the force stored during the autoset cycle (and subsequently updated), before an obstacle alarm is generated. ⚠ **WARNING: It affects impact force directly: make sure that current safety requirements are met with the set value (*). Install anti-crush safety devices where necessary.**
	SHYRA AC F BA				
	Control Input setting 60-61	min	max	50%	Trimmer at minimum – CLOSE input Trimmer at max = START input
T3	Slowdown time [s]	0	SHYRA AC F SL 30	0	Sets the slowdown time performed at the end of each opening and closing operation. 0 = Slowdown disabled
			SHYRA AC F BA 10	0	

Programlama

Dipsviç ayarları

POLEDOOR
YETKİLİ BFT TÜRKİYE SATIŞ VE SERVİSİ
WWW.POLEDOOR.COM

DIP	Logic	Default	Cross out setting used	Description
1	**Transmitter programming**	**ON**	ON	Enables wireless memorizing of transmitters: 1- Press in sequence the hidden key and normal key (T1-T2-T3-T4) of a transmitter that has already been memorized in standard mode via the radio menu. 2- Press within 10 sec. the hidden key and normal key (T1-T2-T3-T4) of a transmitter to be memorized. The receiver exits programming mode after 10 sec.: you can use this time to enter other new transmitters. This mode does not require access to the control panel. IMPORTANT: Enables the automatic addition of new transmitters, clones and replays.
			OFF	Disables wireless memorizing of transmitters and automatic addition of clones. Transmitters are memorized only using the relevant Radio menu or automatically with replays. IMPORTANT: Disables the automatic addition of new transmitters and clones
2	**BAR / 8K2**	**OFF**	ON	Input configured as Bar 8k2 (Fig.G). Input for resistive edge 8K2. The command reverses movement for 1 sec.
			OFF	Input configured as Bar, safety edge (Fig.G). The command reverses movement for 1sec..
3	**Photocell input check**	**OFF**	ON	Enable safety check on the PHOT input. (Fig.G)
			OFF	Safety check on PHOT input not enabled. (Fig.G)
4	**Edge input check**	**OFF**	ON	Enable safety check on the BAR input. (Fig.G)
			OFF	Safety check on BAR input not enabled. (Fig.G)
5	**Photocells during closing**	**OFF**	ON	In the event beam is broken, photocell operation is disabled during opening. During closing, movement is reversed immediately.
			OFF	When beam is broken, photocells are active during both opening and closing. When beam is broken during closing, movement is reversed only once the photocell is cleared.
6	**Safety edge input operation**	**OFF**	ON	ON = Safety edge with active reversal only when closing, when opening the movement stops OFF = Safety edge with active reversal in both directions

Programlama

Dipsviç ayarları

POLEDOOR
YETKİLİ BFT TÜRKİYE SATIŞ VE SERVİSİ
WWW.POLEDOOR.COM

<table>
<tr><th>DIP</th><th>Logic</th><th>Default</th><th>Cross out setting used</th><th>Description</th></tr>
<tr><td rowspan="3">7</td><td rowspan="3">Fast closing</td><td rowspan="3">OFF</td><td rowspan="2">ON</td><td>SHYRA AC F SL
Closes 3 seconds after the photocells are cleared before waiting for the set TCA to elapse.</td></tr>
<tr><td>SHYRA AC F BA
Closes 1 second after the photocells are cleared before waiting for the set TCA to elapse.</td></tr>
<tr><td>OFF</td><td>Logic not enabled</td></tr>
<tr><td rowspan="3">8</td><td rowspan="3">Residential / apartment building operation</td><td rowspan="3">OFF</td><td>ON</td><td>Sets the automation type of operation:
ON = Apartment building</td></tr>
<tr><td>OFF</td><td>OFF = Residential</td></tr>
<tr><td></td><td>Reaction to the START input (wired or radio):
<table>
<tr><th></th><th>Residential</th><th>Apartment building</th></tr>
<tr><td>CLOSED</td><td>Opens</td><td>Opens</td></tr>
<tr><td>WHILE CLOSING</td><td>Stops</td><td>Opens</td></tr>
<tr><td>OPEN</td><td>Closes</td><td>Closes</td></tr>
<tr><td>WHILE OPENING</td><td>STOPS + TCA</td><td>No effect</td></tr>
<tr><td>AFTER STOP</td><td>Opens</td><td>Opens</td></tr>
</table>
Reaction to the OPEN input (wired):
<table>
<tr><th></th><th>Residential</th><th>Apartment building</th></tr>
<tr><td>CLOSED</td><td>Opens</td><td>Opens</td></tr>
<tr><td>WHILE CLOSING</td><td>Opens</td><td>Opens</td></tr>
<tr><td>OPEN</td><td>No effect</td><td>No effect</td></tr>
<tr><td>WHILE OPENING</td><td>Keeps it open</td><td>Keeps it open</td></tr>
<tr><td>AFTER STOP</td><td>Opens</td><td>Opens</td></tr>
</table>
Reaction to the PEDESTRIAN input (radio):
<table>
<tr><th></th><th>Residential</th><th>Apartment building</th></tr>
<tr><td>CLOSED</td><td>Opens partially</td><td>Opens partially</td></tr>
<tr><td>WHILE CLOSING</td><td>Stops</td><td>Opens partially</td></tr>
<tr><td>OPEN</td><td>Closes</td><td>Closes</td></tr>
<tr><td>WHILE OPENING</td><td>STOPS + TCA</td><td>No effect</td></tr>
<tr><td>AFTER STOP</td><td>Opens partially</td><td>Opens partially</td></tr>
</table>
</td></tr>
</table>

Programlama

Autoset (çalışma süresinin algılanması)

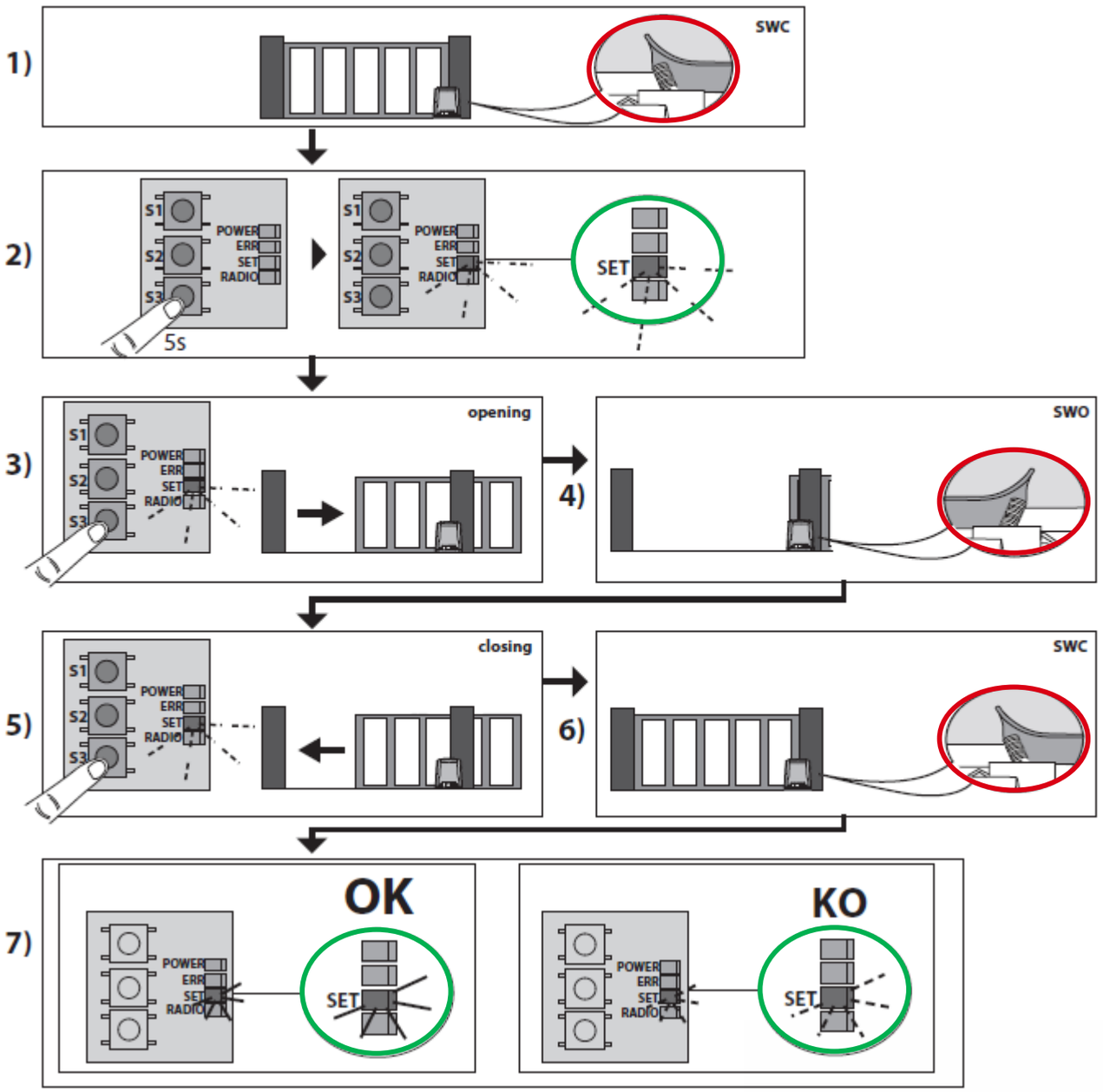

1. Kanadı kapanma limit svicine dayayın.
2. Autoseti başlatmak için 5 saniye S3'e basılı tutun, SET ledi yanıp sönene kadar
3. S3'e basın açma işlemi için
4. Kapı açılma limit svicine ulaşana kadar bekleyin
5. Kapanma manevrasını başlatmak için S3'e basın.
6. Kapı kapanma limit svicine ulaşana kadar bekleyin.
7. Eğer çalışma süresi doğru bir şekilde hafızaya alındıysa, SET ledi 10 saniye boyunca yanar.

POLEDOOR
YETKİLİ BFT TÜRKİYE SATIŞ VE SERVİSİ
WWW.POLEDOOR.COM

BFT
Be ahead

Programlama

LED

POWER	Steadily lit: - Mains power on - Board powered - Fuses intact
START	Lit: START input activated
OPEN	Lit: OPEN pedestrian input activated
STOP	Unlit: STOP input activated
PHOT	Unlit: PHOT photocell input activated
FAULT 1	PHOT input safety device test input diagnostics
BAR	Unlit: BAR safety edge input activated
FAULT 2	BAR input safety device test input diagnostics
SWC	Unlit: leaf fully closed
	Lit: motor limit switch is disengaged
	Flashing: end of the work time while closing
SWO	Unlit: leaf fully open
	Lit: motor limit switch is disengaged
	Flashing: end of the work time while opening
ERR	Unlit: no error
	LIT: see error diagnostics table
RADIO (GREEN)	Unlit: remote programming not active
	Radio LED only flashing: Remote programming active, waiting for hidden key.
	Flashing in sync with Set LED: Transmitter deletion in progress
	Lit: remote programming active, waiting for desired key.
	Lit 1s: Radio receiver channel activated
SET	Lit: Set key pressed / Autoset completed successfully
	Flashes three times: Autoset in progress
	Fast flashing 10s: Autoset failed
	Flashing in sync with Radio LED: Transmitter deletion in progress
	Lit 1s: Start/Stop after key S3 pressed
	Lit 10s: Autoset completed correctly

POLEDOOR
YETKİLİ BFT TÜRKİYE SATIŞ VE SERVİSİ
WWW.POLEDOOR.COM

POLEDOOR
YETKİLİ BFT TÜRKİYE SATIŞ VE SERVİSİ
WWW.POLEDOOR.COM

Programlama

Arıza Tespiti

ERR ve SET ledlerinin durumlarına göre hata tespiti yapımaktadır. Örneğin ERR ledi hızlıca flaş yapıyorsa ve SET ledi yavaşça flaş yapıyorsa , kartta bazı bazı ayarlar değiştirildiği ama bu değişikliğin kaydedilmediği anlaşılır.

		Led ERR		
		Lit	**slow flashing**	**fast flashing**
Led SET	**Unlit**		Photocell test, Costa o Costa 8k2 failed - Check photocell connection and/or logic settings	
	Lit	Reverse due to obstacle - Amperostop - Check for obstacles in path		Thermal cutout - Allow automated device to cool
	slow flashing	Internal system supervision control error. - Try turning the board off and back on or press button S2. If the problem persists, contact the technical assistance department. Thermal cutout - Allow automated device to cool		Changed settings and/or Operating logics press S2 for 5s to confirm.

Aksesuarlar

THEA

Radius B LTA 230V

MITTO B RCB

KLEIO B RCA

QBO TOUCH

BFT
Be ahead

Aksesuarlar

CVZ

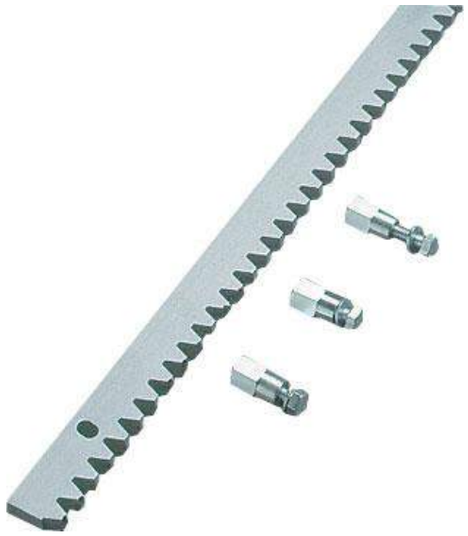

BIR C

CSP

ERIS (wireless)

Pinion 18 denti

Ventimiglia NS

www.bft-automation.com

BFT
Be ahead

Thank you

for your time and attention.

© 2015, Bft Spa - All rights reserved.

This document is protected by copyright.
No part of may be modified, reproduced or distribuited in any form
by any means without prior written authorization of Bft Spa.

Be ahead

POLEDOOR

YETKİLİ BFT TÜRKİYE SATIŞ VE SERVİSİ

WWW.POLEDOOR.COM

Be ahead